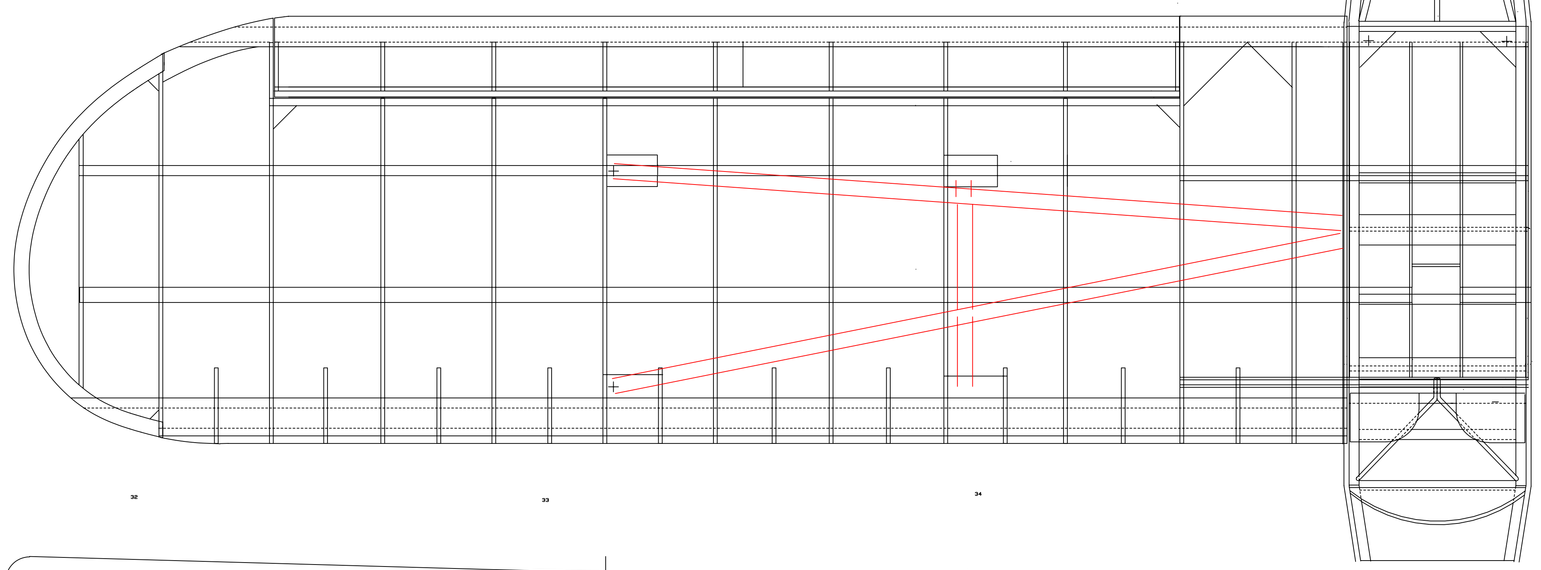

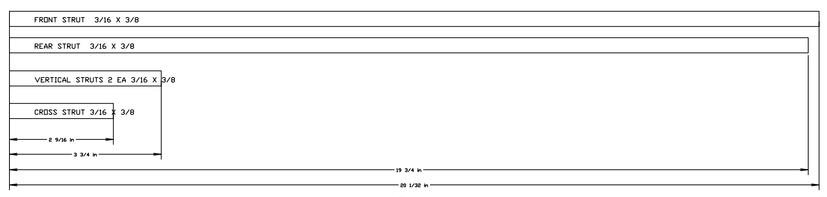

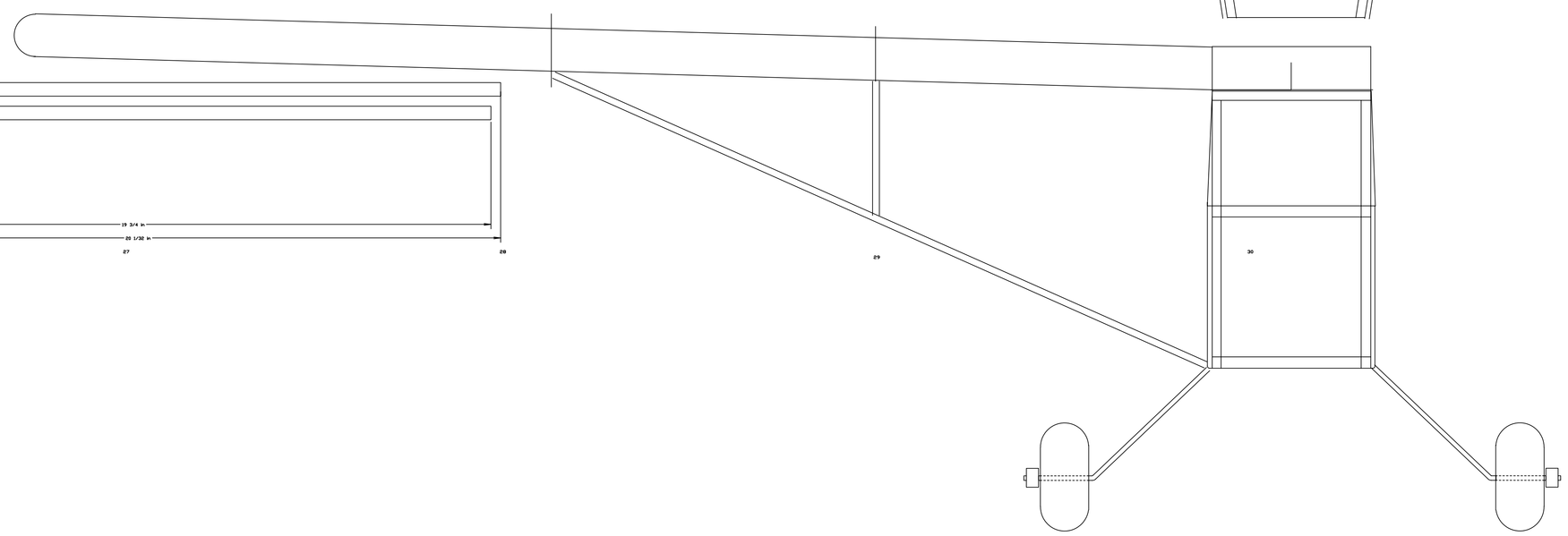

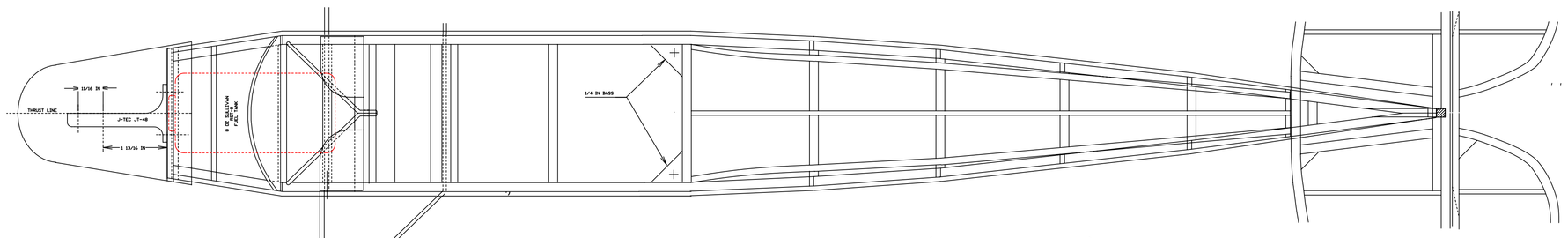

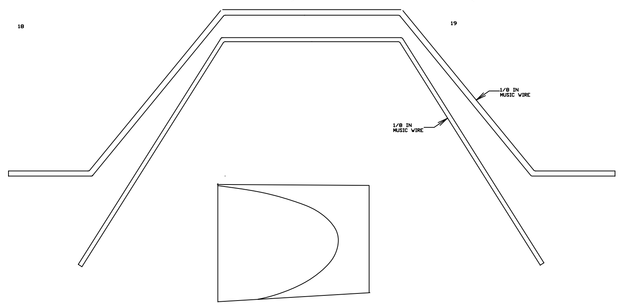

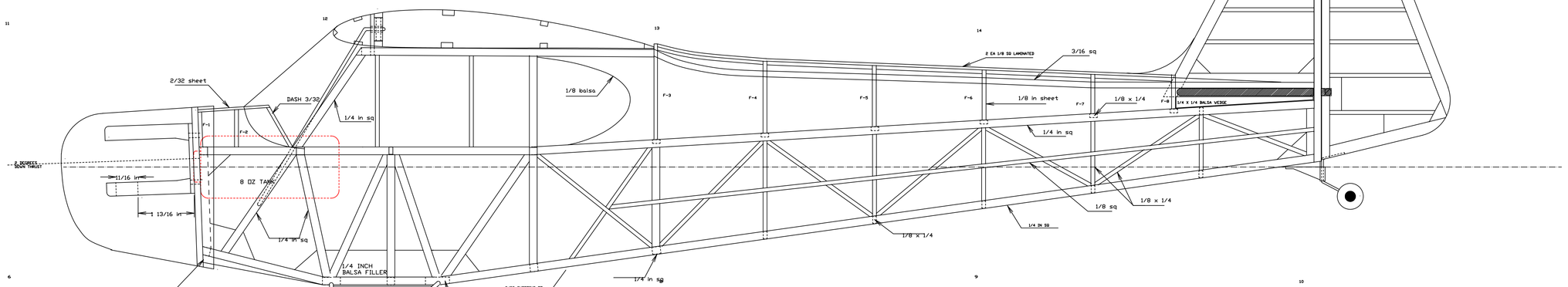

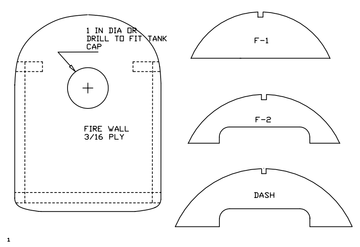

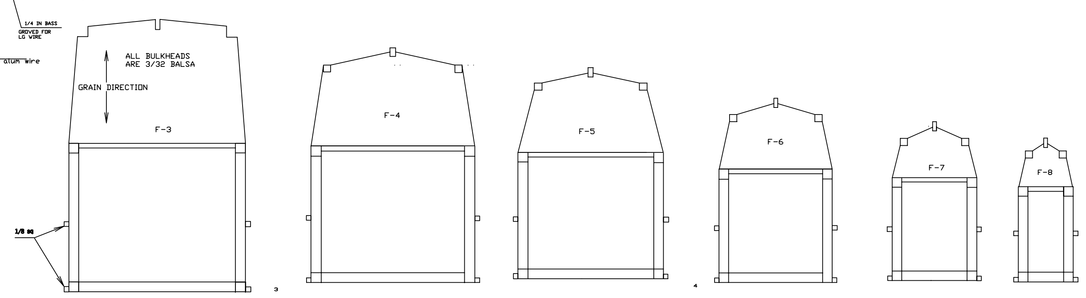

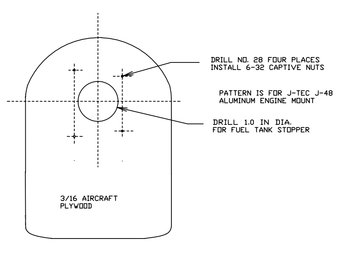

FIRE WALL
FRONT VIEW