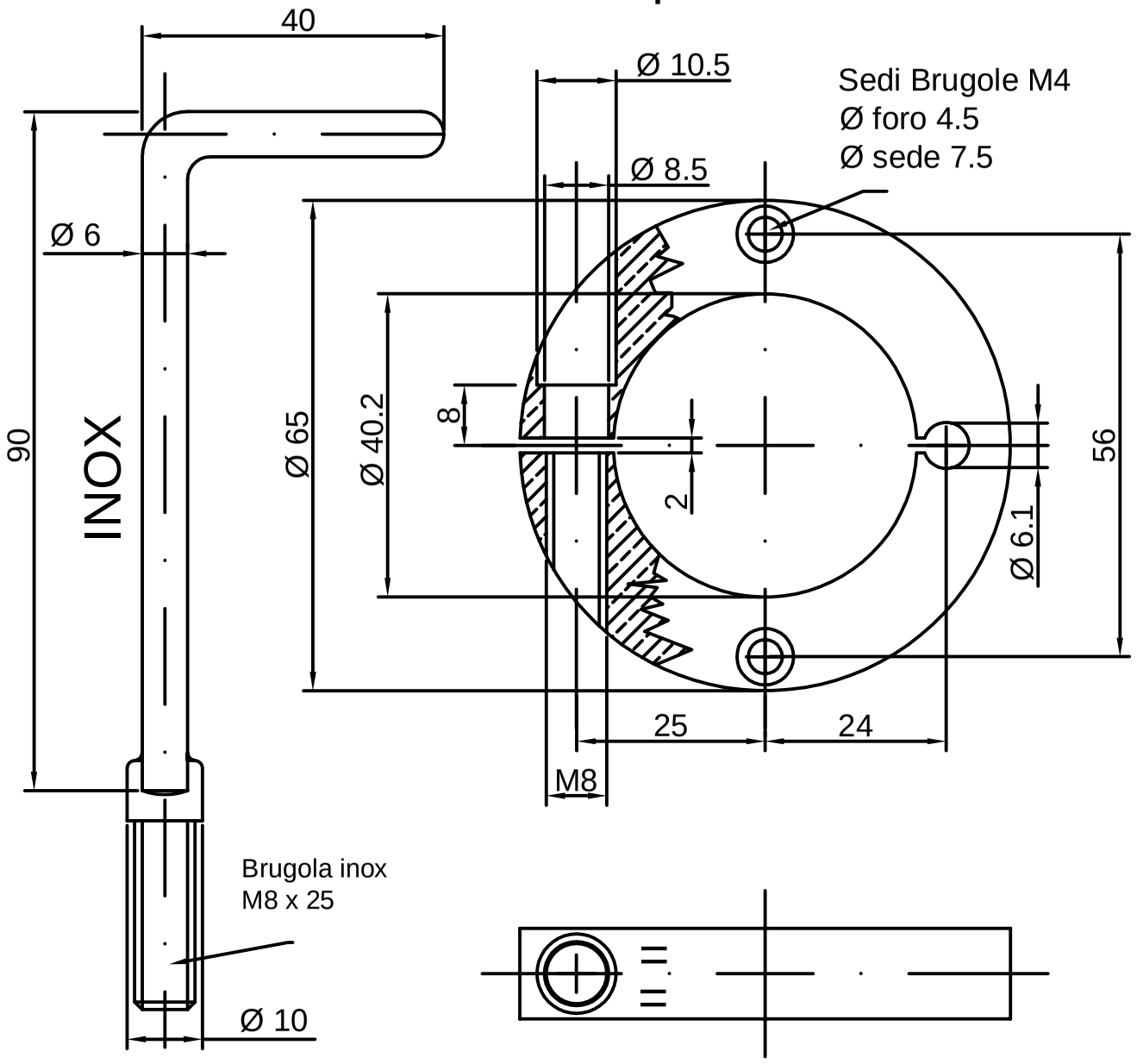FRENO Durall
Sp. 12